Ventus s.a.
Air Moving Technologies

CFX 45120 M H4

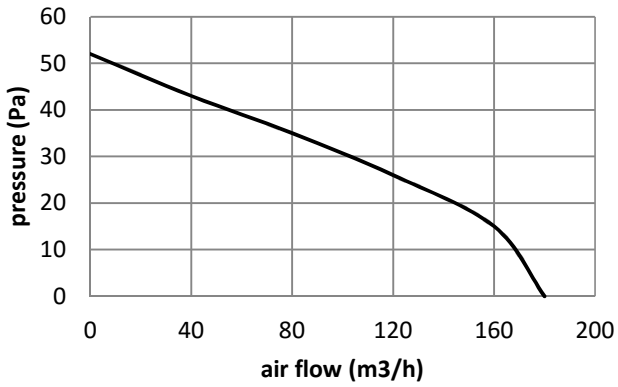

Model	Voltage VAC	Frequency (Hz)	Power (W)	Speed RPM	Airflow M^3/h
CFX 45120M H4	230	50	26±4	2200±100	180

*: above specifications are subject to change without prior notice

Dimensions

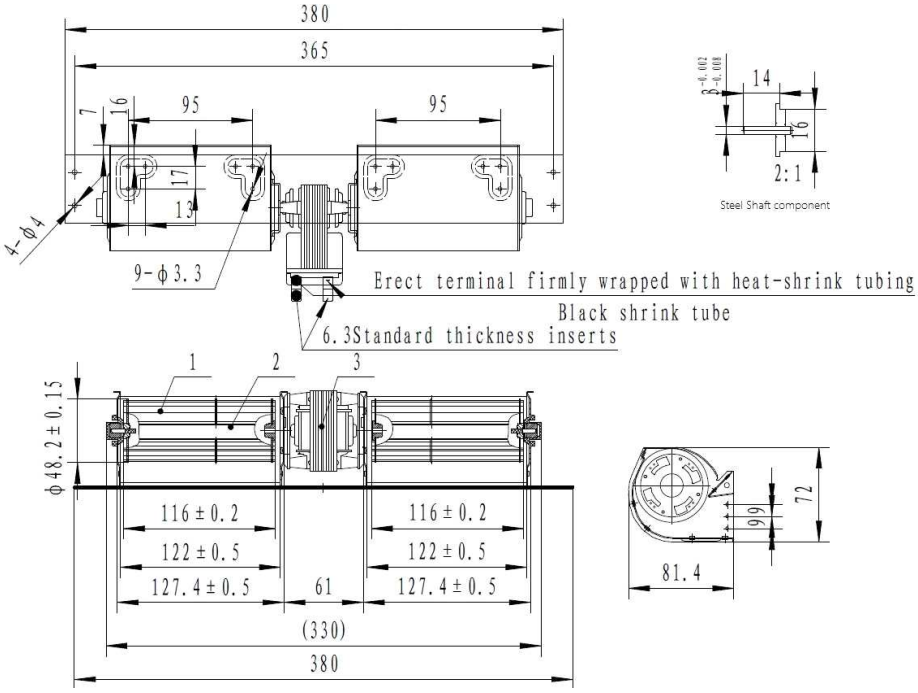

*: electrical connection can be 1015 20AWG double black lead wires: 350 ± 10 mm (stripped part: 10 mm)

Ventus S.A. Avenue Louise 226 B-1050 Brussels Belgium Tel.: +32 2 657 7505 Fax: +32 2 658 9604
Email: info@ventus-sa.com www.ventus-sa.com